SIEMENS

Ingenuity for life

Selection Criteria for VSC HVDC System Solutions

Marcus Haeusler

CIGRE Colloquium ATHENS 2018
“Latest Developments in HVDC Systems, battery storage and EMF.
Challenges for integrating connections in transmission and distribution systems”
organized by CIGRE Greek National Committee

Agenda

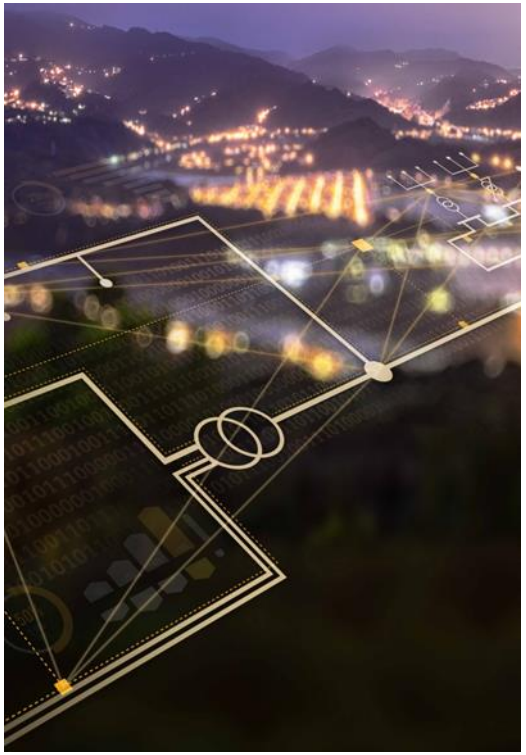

- Transmission Grid Requirements due to Renewables Integration
- VSC HVDC Converter Arrangements
- DC Circuits and VSC HVDC Converter Types
- Compact Solutions

Integration of Renewables in Transmission Grids

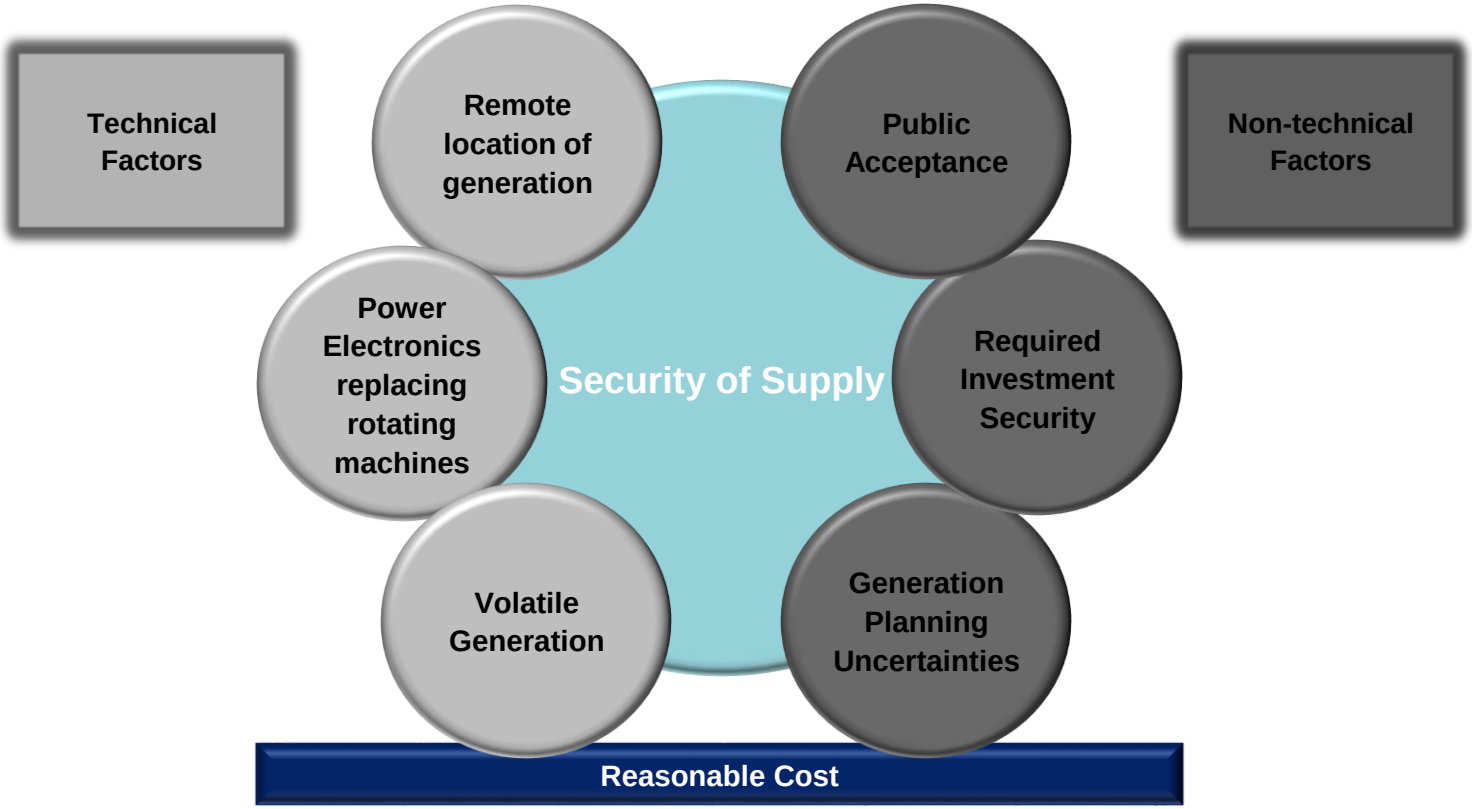

- VSC HVDC systems providing solutions for new grid requirements

System Requirements – Criteria for HVDC Solutions

- AC system strength
  Dynamic AC voltage control
  System recovery ancillary services
  Compact solution
  Future expansion (MT or grid)
  etc.

  → Converter technology:
  LCC or VSC ?

- DC circuit configuration
  Power ratings
  RAM
  Investment Costs CAPEX
  Operational Costs OPEX
  etc.

  → Converter arrangements

- DC Circuit relevant features
  DC fault behavior
  Interaction with AC network
  AC system requirements
  etc.

  → Converter type:
  Half-bridge or
  Full-bridge converter ?

VSC HVDC Converter Arrangements

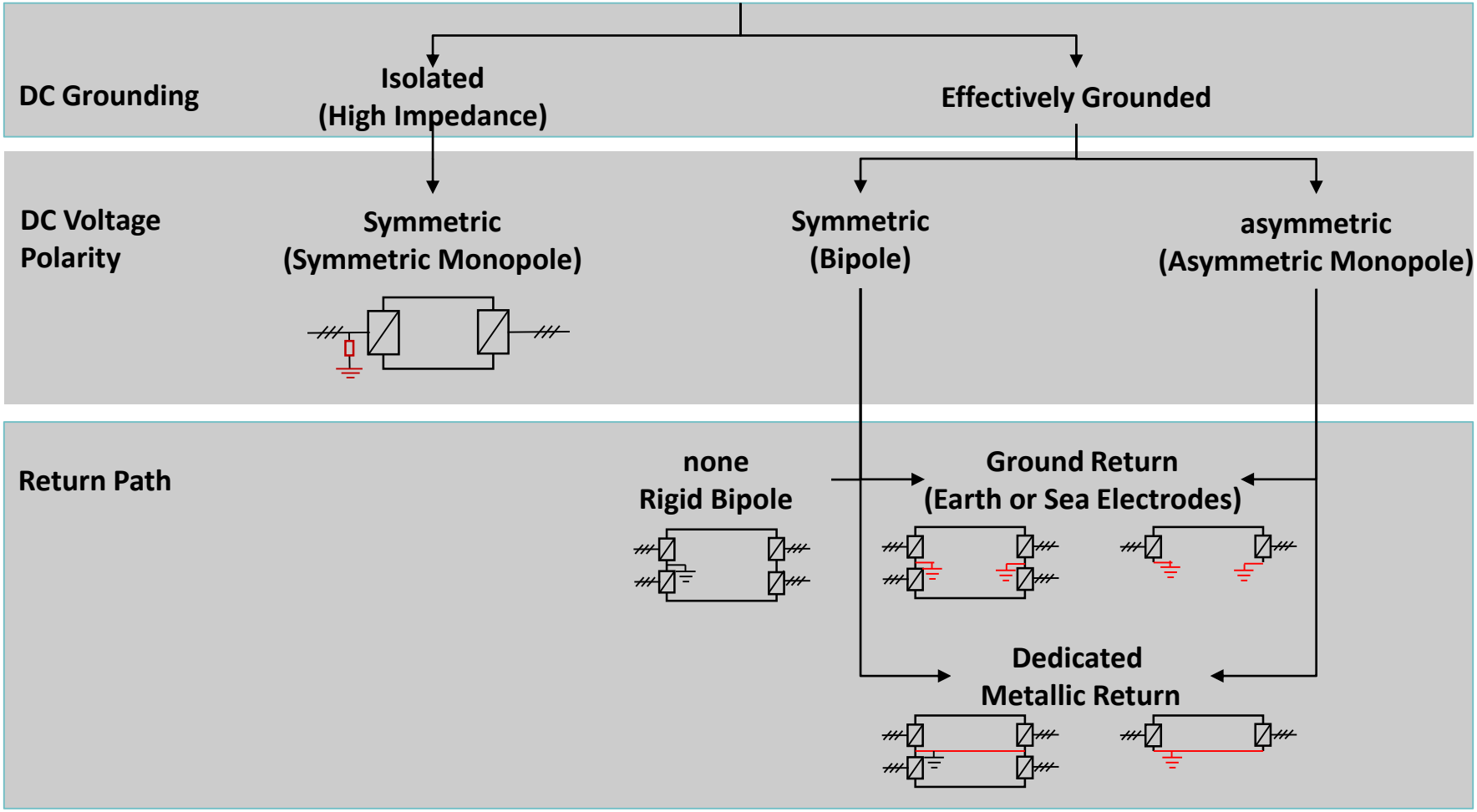

Case Example: 2 GW VSC Transmission

- Bipole 2000 MW, ±500 kV
- Rigid Bipole 2000 MW, ±500 kV
- Two Symmetrical Monopoles 1000 MW, ±320 kV each
- Two Rigid Bipoles 1000 MW, ±320 kV
- (Symmetrical Monopole 2000 MW, ±500 kV) ?

Symmetrical Monopole

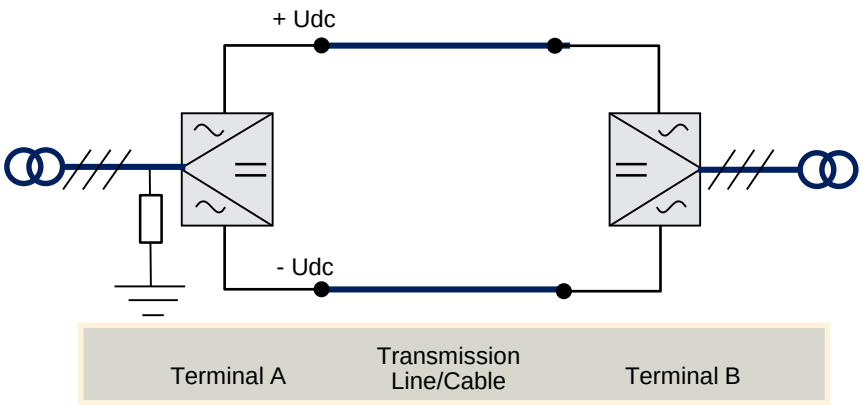

- Single (ungrounded) converter, symmetrizing dc terminal voltages via high-impedance grounding
- Advantages:
  - simple & compact design, economical solution
  - no dc stresses on interface transformer
- Disadvantages:
  - high overvoltages and equipment stresses in case of dc side ground faults
  - for dc overhead lines risk of unbalancing the dc voltages due to pollution and increased probability of dc faults (e.g. due to pollution, lightning strikes)
  - no redundancy in converter arrangement
- Maximum voltage rating currently at +/- 400 kV dc (NEMO project under construction)
- Many project references up to 1000 MW

➢ Ideal for pure cable transmission projects at “moderate” power ratings

Symmetrical Monopole – Single DC Pole Fault

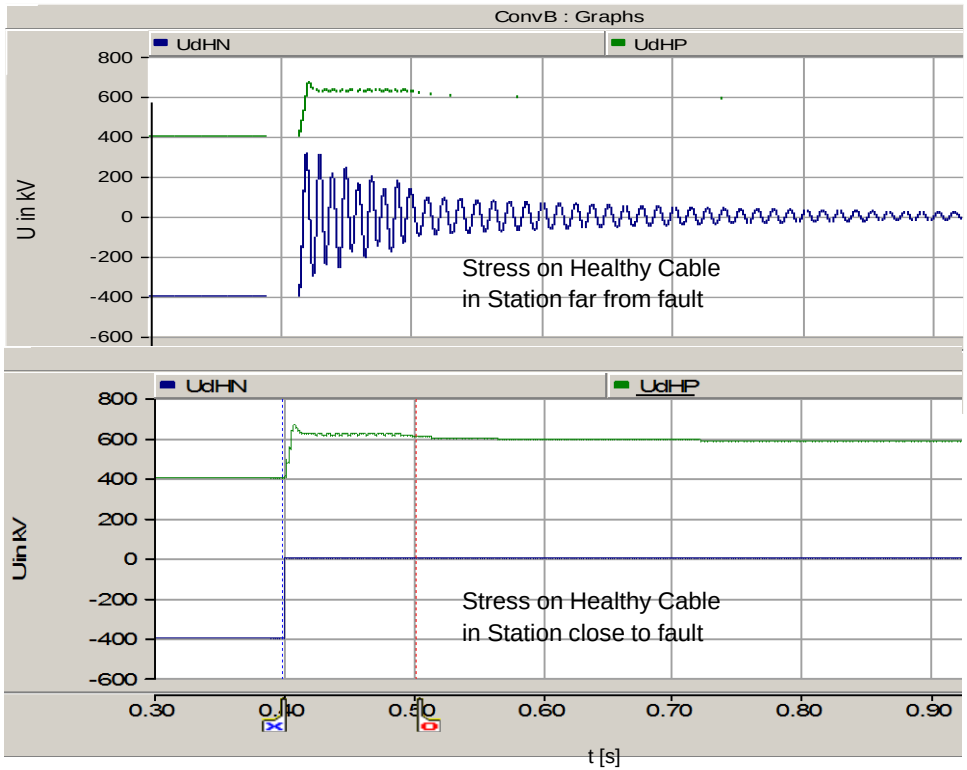

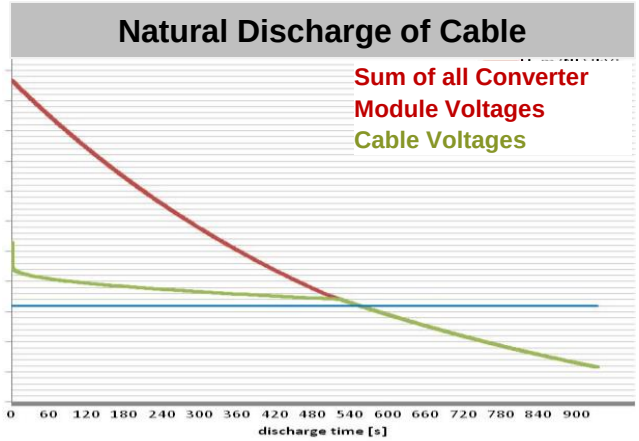

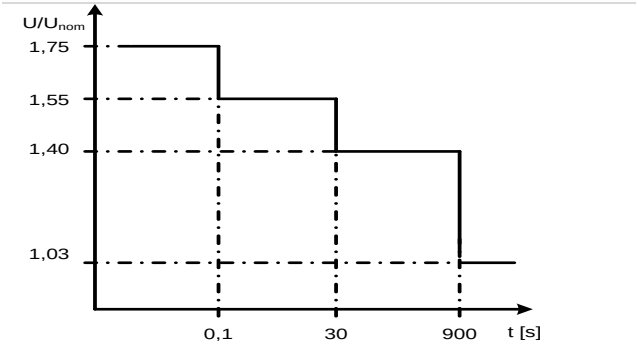

Bipole with Metallic Return (DMR) or Electrodes

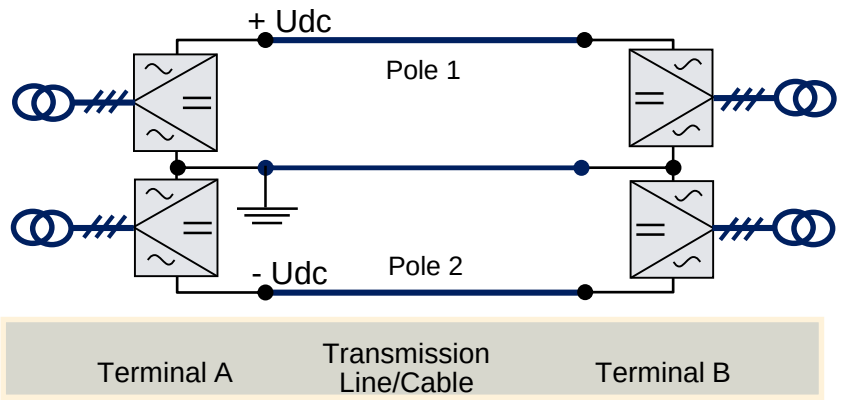

- Two series connected converters per station
- Common current return path with reference grounding at one location
- Advantages:
  - high availability and flexibility in case of single faults of converter or line (50% power redundancy)
  - suitable for high dc system voltages due to series connection of converters
  - low dc line losses in case of balanced operation
- Disadvantages:
  - converter transformer to be designed for dc stresses (steady state / transient)
  - common equipment at neutral bus may affect both poles in case of outages
  - transient independence of both poles depends on converter solutions

➢ Highly reliable long transmission projects at higher power ratings

Rigid Bipole

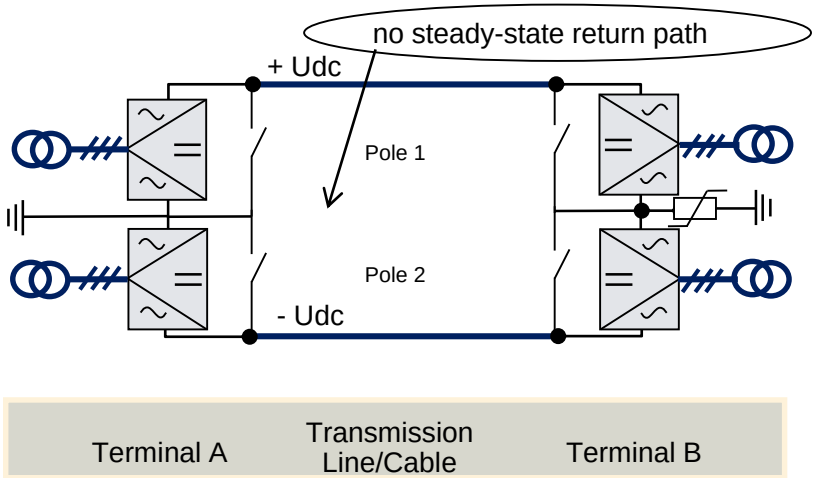

- Only 2 HV conductors installed, no dedicated current return path per individual converter
- Bypass switches allow reconfiguration of dc circuit and monopolar operation in case of converter outages
- Advantages:
  - Economic design due to saving of the return conductor
  - High (steady state) availability and flexibility in case of single faults of converter (50% power redundancy)
- Disadvantages:
  - No redundancy in case of single cable faults
  - Temporary complete power interruption (≈ 2 sec.) in case of converter faults

➢ Economic solution for long cable transmission projects

Effects of Ground Faults for Bipoles (Half-Bridge)

CB will trip
Transformer must be re-energized
Converter charge sequence
must be carried out

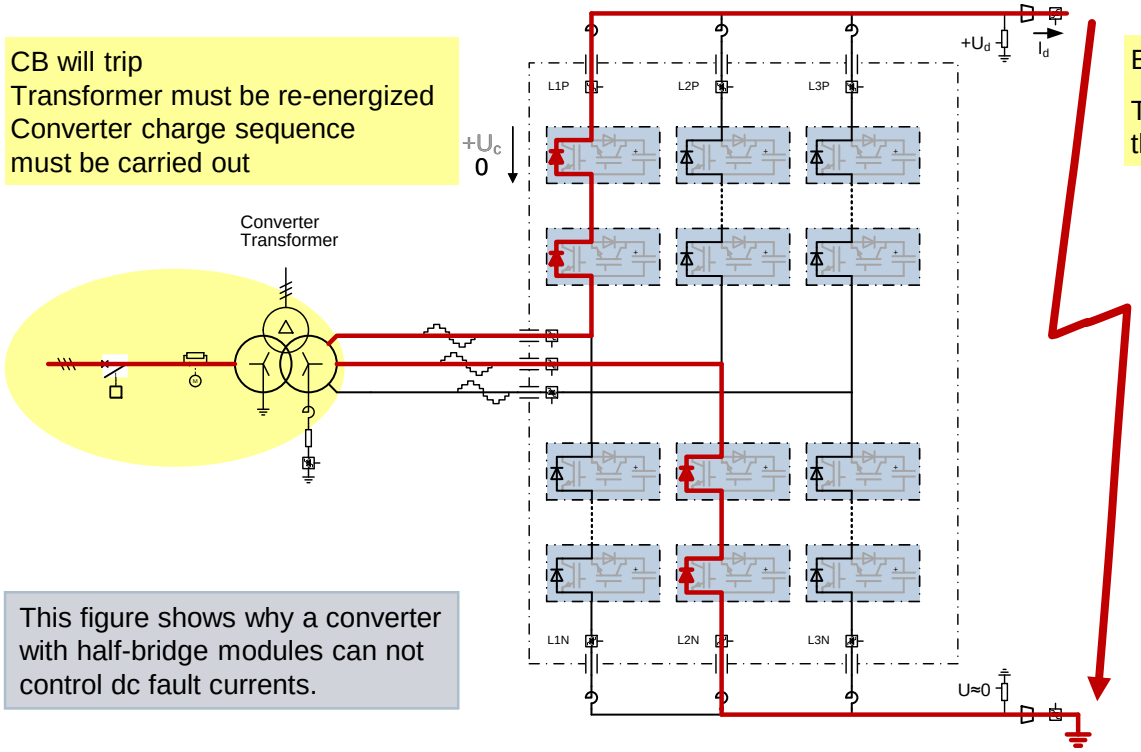

Blocking the Converter will not limit the fault current.

The freewheeling diodes supported by the bypass thyristors are forming a 6-pulse rectifier.

This figure shows why a converter with half-bridge modules can not control dc fault currents.

Effects of Ground Faults for Bipoles (Half-Bridge)

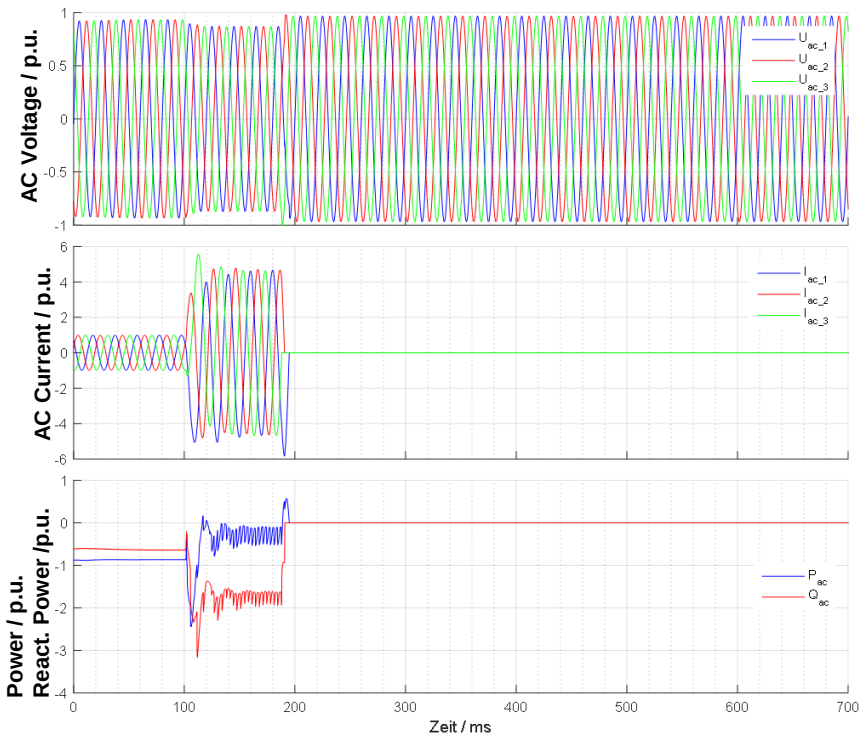

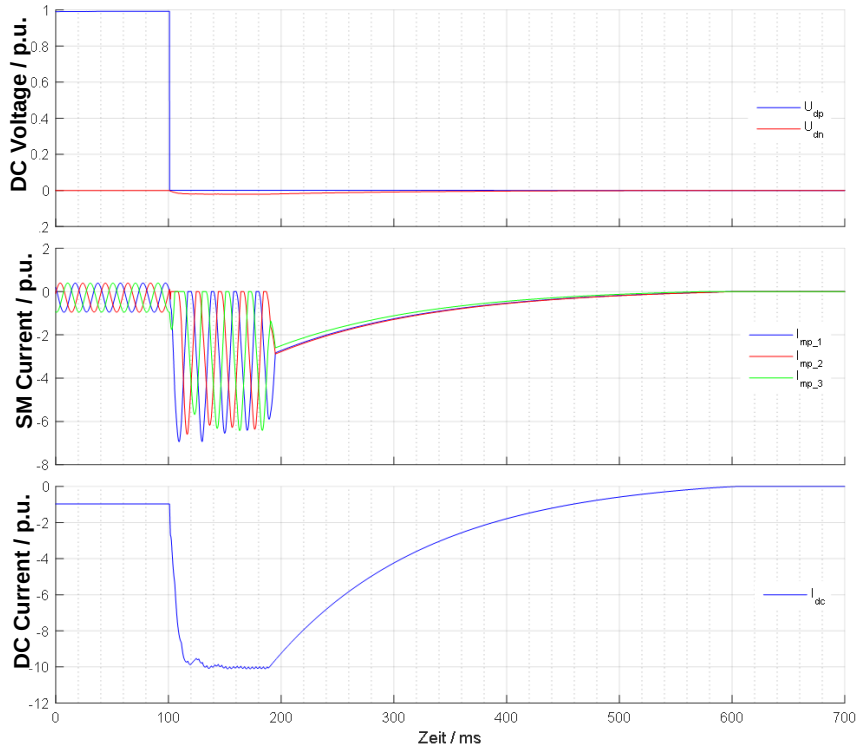

Fault clearance (and possible recovery in case of combined OHL configuration)

Effects of Ground Faults for Bipoles (Full-Bridge)

Fast Recovery Possible
- CB remains closed
- Transformer remains energized
- Converter remains charged

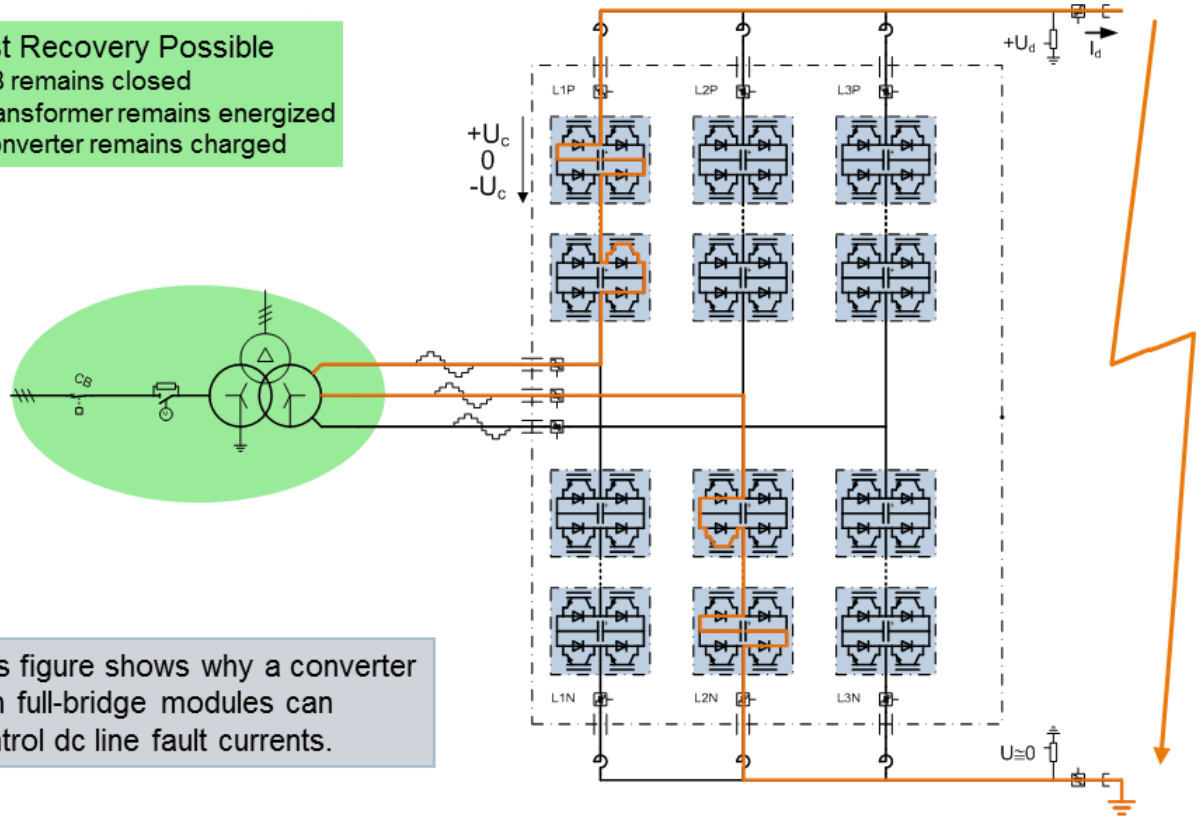

This figure shows why a converter with full-bridge modules can control dc line fault currents.

Bipole (Full-Bridge) – Faulty Pole during DC Line Fault

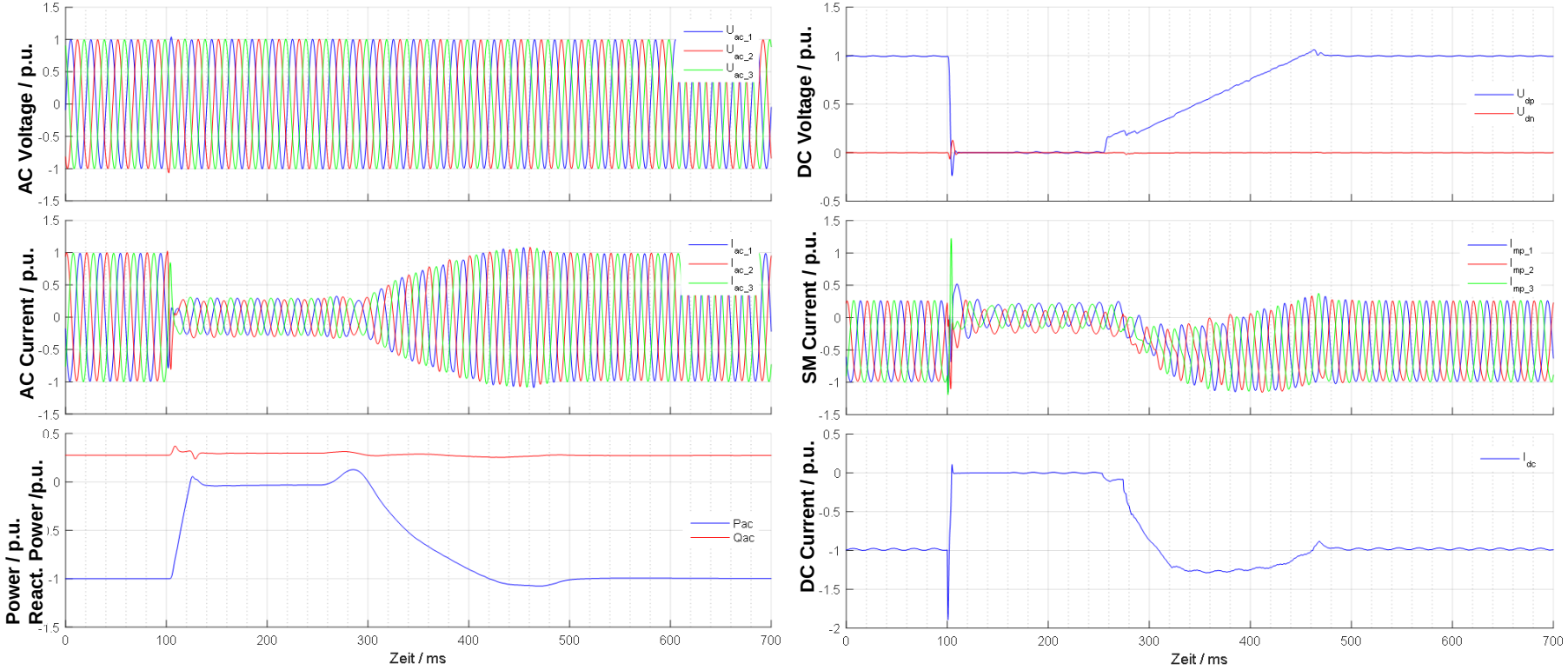

Fault clearance (and possible recovery in case of combined OHL configuration)

Bipole (Full-Bridge) – Healthy Pole during DC Line Fault

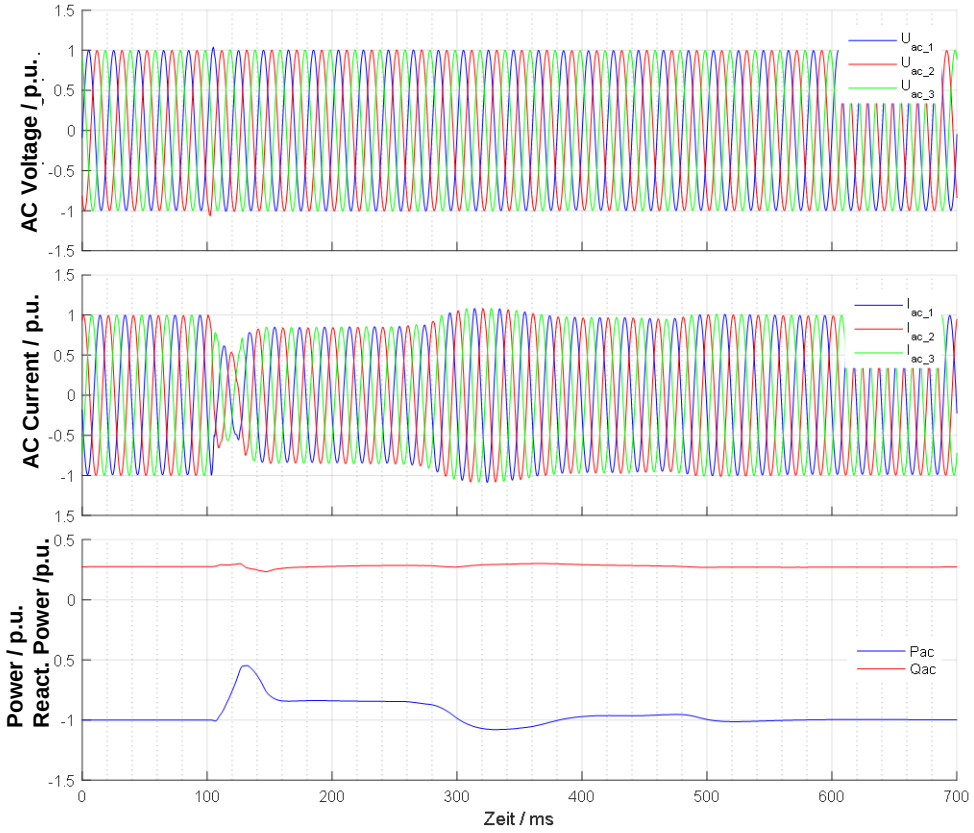

valid for DMR (Dedicated Metallic Return)!

Summary: Comparison of Bipolar Solutions

Solution / Topic	Half-bridge Converter	Full-bridge Converter
DC fault clearance	by ac breaker	by power electronics
Duration for disconnecting fault driving source*	approx. 100 msec	few msec
Reactive power support during fault	no	continuously
Impacts on healthy pole	high	small
Impact on other terminals of multi-terminal	high	small
DC Cable stresses	higher	lower can be actively influenced
Flexibility for DC voltage control (e.g. multi-terminal)	low	high, flexible for future changes in topology

* time to recover after fault is system dependent and needs to be determined for specific configuration (e.g. cable parameters)

- Half-bridge converters can be ideal solution if fast dc fault clearance is not required

HVDC Transmission Path

VSC technology allows the use of extruded cables with XLPE insulation

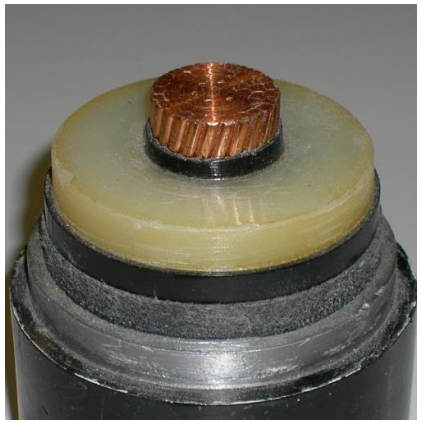

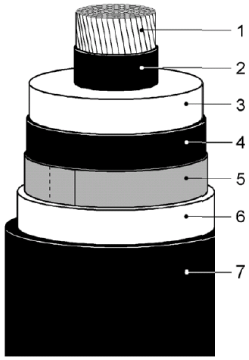

Conductor: copper, circular, stranded

Conductor screen: extruded semiconducting XLPE

Insulation: XLPE

Insulation screen: extruded semiconducting XLPE

Bedding: semiconducting tape

Metallic sheath: lead alloy

Outer sheath: PE black

Cables with MI insulation can also be used

Overhead Lines - Connection with Limitations

Main Issues:

- long fault clearing times
- slow auto-reclosure function

Overhead lines have a high fault frequency due to lightening strikes.

Fast recovery is therefore an important advantage, but difficult to realize with half bridge modules.

Impact of DC Circuit -1-

Characteristic	Impact	SMP	Bipole	Rig. Bip.
Length of dc circuit / Power rating	Selection of DC voltage and number of lines -> costs & losses	up to 1200 MW @ ± 320 kV up to 1600 MW @ ± 400 kV (up to 2000 MW @ ± 525 kV)	up to 2000 MW @ ± 525 kV higher dc voltage for OHL	up to 2000 MW @ ± 525 kV for XLPE cables
“Moderate” power rating (e.g. up to 1 - 1.6 GW)	Converter costs	+ 1 SMP	0	0
	Line costs + losses	+ 2 HV lines	0 2 HV + 1 MV lines	+ 2 HV lines
“Larger” power rating (e.g. > 1 - 2 GW)	Converter costs	0 2 SMP	0	0
	Line costs + losses	– 4 HV lines	0 2 HV + 1 MV lines	+ 2 HV lines

Impact of DC Circuit -2-

Characteristic	Impact	SMP	Bipole	Rig. Bip.
OHL or Cable	Right-of-Way Acceptance &Permission Submarine			
OHL	Exposed to pollution and higher risk and frequency of external faults (e.g. lightning strike)	(yes) with special measures	yes	yes
Cable	Submarine: MI or XLPE Land: XLPE preferred			
Remaining active power after converter outage		0 %	50 %	50 %
Remaining active power after single DC line outage		0 %	50 – 100 %	0 %

Impact of DC Circuit -3-

Characteristic	Impact	SMP	Bipole	Rig. Bip.
DC Line Fault	Cleared by	AC CB (Half-Bridge)	AC CB (Half-Bridge)	AC CB (Half-Bridge)
	Current stresses	Moderate	High	High
	Voltage stresses	High	Moderate	Moderate

High equipment stresses / no. of fault recoveries limited

Relevant for weak AC systems

- Transient fault behavior may require different converter arrangement or converter type

Non-Technical Requirements

Challenge	Demands	Solutions
Public Acceptance	▷ Low environmental impact ▷ Low electromagnetic fields ▷ Low acoustic noise ▷ Limited right-of-ways	▷ VSC HVDC as compact station design, typically no harmonic filters required ▷ Compact equipment solutions, e.g. DC GIS ▷ Underground transmission using cables ▷ Conversion of AC transmission lines or hybrid AC/DC towers

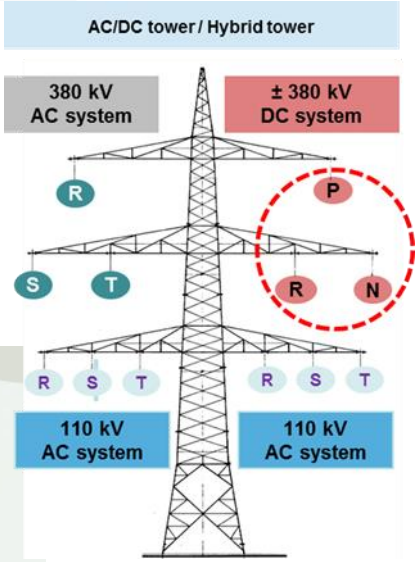

Application examples of DC GIS

Converter station

- **Offshore**
- **On land**

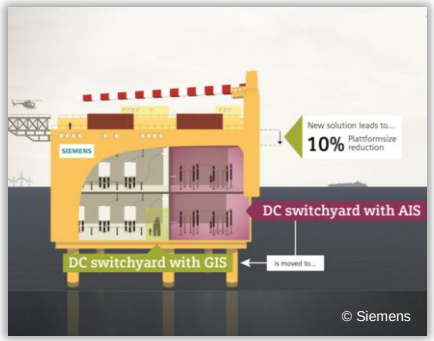

© Siemens

Space-saving installation, aesthetic planning, independent from environmental conditions, no fire hazard

Transition station

- **OHL – cable/GIL**
- **GIL – cable**
- **Cable – cable**

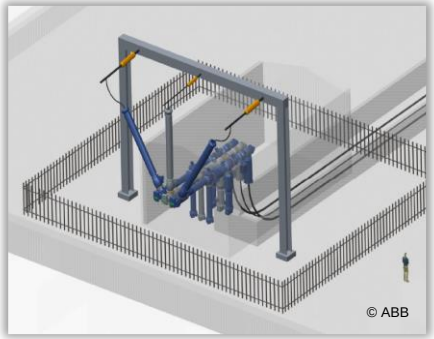

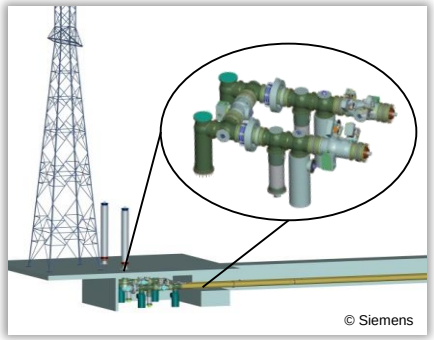

Thank you!

Marcus Haeusler
Siemens AG
Energy Management Division
Transmission Solutions
Lead Engineering HVDC
Freyeslebenstr. 1
91058 Erlangen, Germany
Tel.: +49 9131 7-31931
Mobile: +49 172 8357387
marcus.haeusler@siemens.com

AC Terminal Fault Clearance with Half Bridge - Effectively Grounded DC

Rectification will cause DC on the Grid-side of the Transformer. The CB may not be able to break the current.

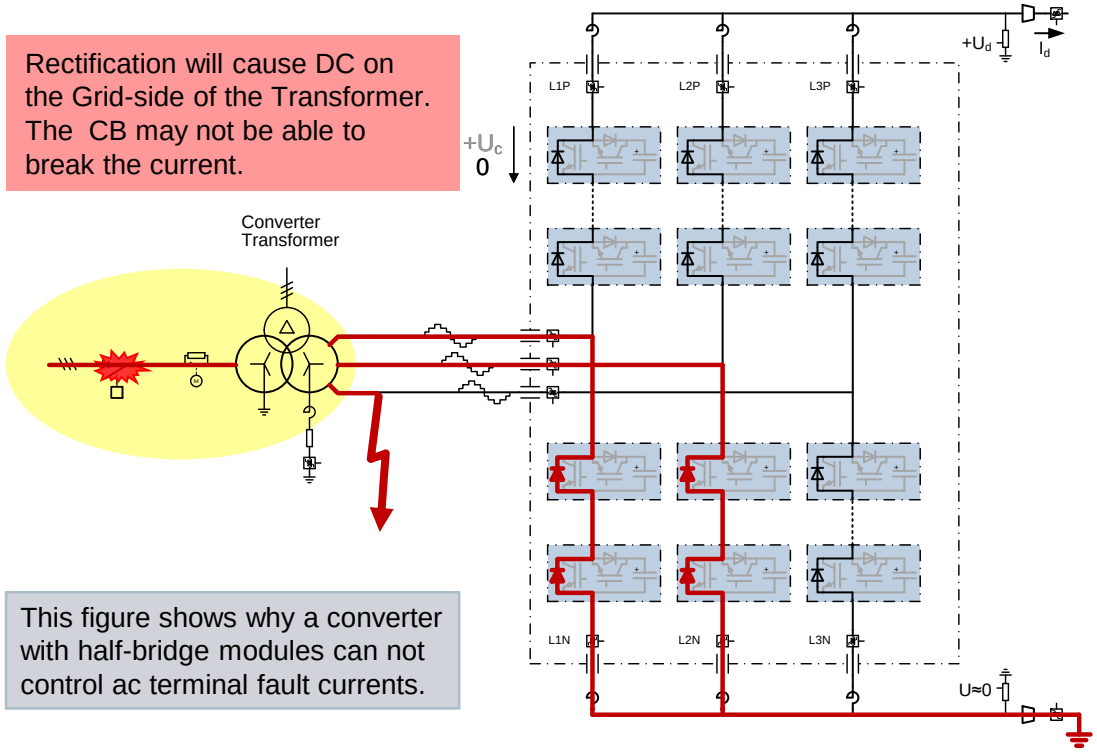

This figure shows why a converter with half-bridge modules can not control ac terminal fault currents.

Blocking the Converter will not limit the fault current.

The freewheeling diodes supported by the bypass thyristors are forming diode rectifiers in the lower arms of the healthy phases.

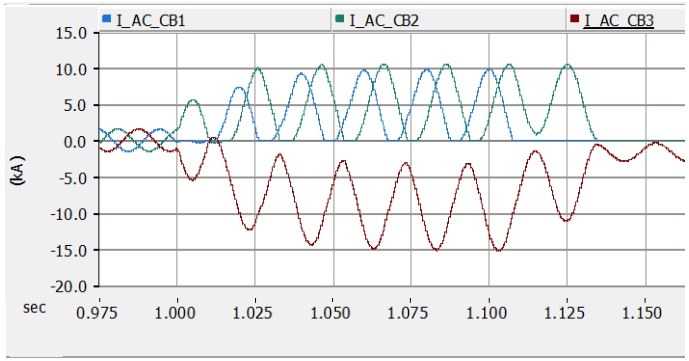

AC Terminal Fault Clearance with Full Bridge - Effectively Grounded DC